Camshafts / Cam Carrier / Cam Chain Tensioner

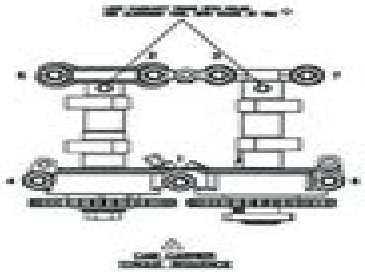

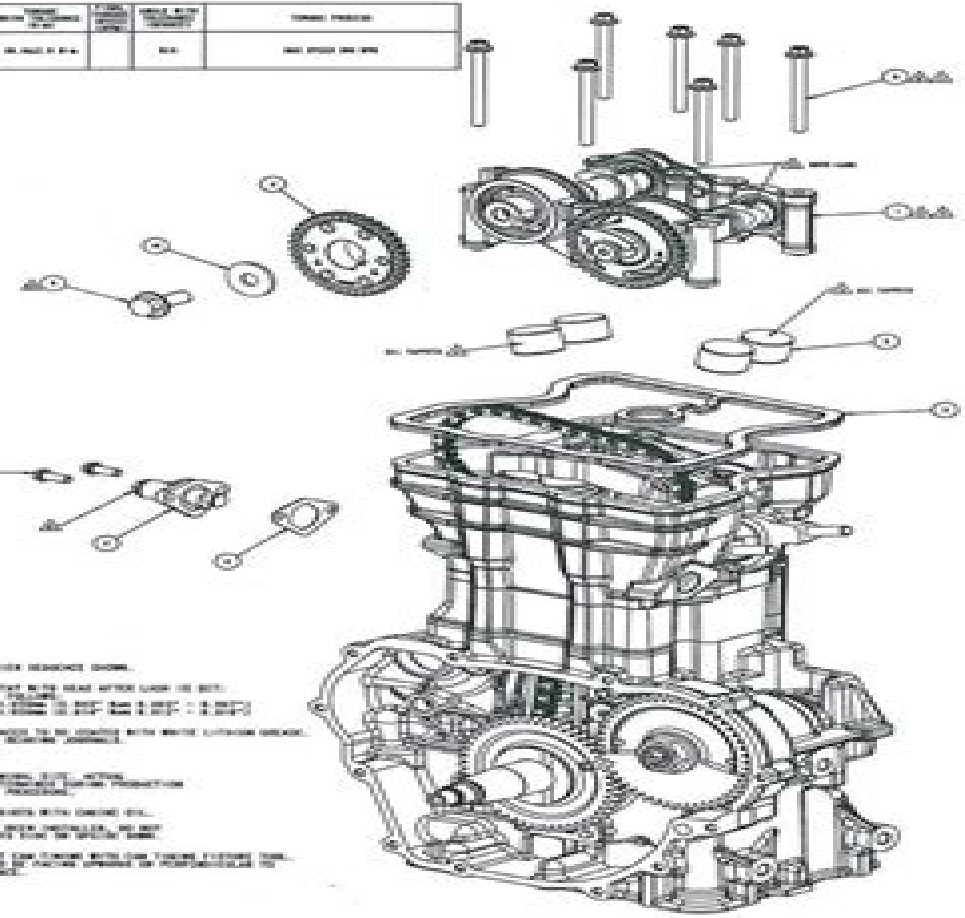

FASTENER TORQUE TABLE	

NOTES:

© Copyright Polaris Industries Inc.

RepairManual.com

2015 Polaris 550 Atv Service Manual

Jeff Clew

2015 Polaris 550 Atv Service Manual:

Polaris ATV Owners Workshop Manual Alan Ahlstrand,John Harold Haynes,2004 The purpose of this manual is to help you get the best value from your ATV It can help you decide what work must be done even if you choose to have it done by a dealer service department or a repair shop it provides information and procedures for routine maintenance and servicing and it offers diagnostic and repair procedures to follow when trouble occurs This book should allow you to tackle any job yourself nbs Polaris ATVs 250-800cc, '98-'07 Alan Ahlstrand,Ken Freund,2018-05-01 Each Haynes manual provides specific and detailed instructions for performing everything from basic maintenance and troubleshooting to a complete overhaul of the machine in this case the Polaris ATVs 250 800cc model years 1998 through 2007 Do it yourselfers will find this service and repair manual more comprehensive than the factory manual making it an indispensable part of their tool box A typical Haynes manual covers general information troubleshooting lubrication and routine maintenance engine top end engine lower end primary drive clutch and external shift mechanism transmission and internal shift mechanism engine management system electrical system wheels tires and drivebelt front suspension and steering rear suspension brakes body and color wiring diagrams An index makes the manual easy to navigate *Polaris Sportsman 400, 450 & 500 1996-2013 Manual* Penton Staff,2000-05-24 Sportman 400 2001 2005 Sportsman 450 2006 2007 Sportsman 450 Browning Edition 2006 Sportsman 500 1996 2010 Sportsman 500 RSE 2000 2002 Sportsman 500 DUSE 2001 2002 Sportsman 500 HO 2001 2006 2008 2010 Sportsman 500 X2 2006 2010 Sp Polaris Sportsman 600, 700, & 800 Series 2002-2010 Penton Staff,2000-05-24 Sportsman 600 2003 2005 Sportsman 700 2002 2006 Sportsman 700 EFI 2004 2007 Sportsman 700 EFI X2 2008 Sportsman MV7 2005 2006 Sportsman 800 EFI 2005 2010 Sportsman 800 EFI X2 2007 2009 Sportsman 800 EFI Touring 2008 2009 Clymer Polaris RZR 800 2008-2014 Haynes Publishing,2017-10-21 The Polaris RZR 800 off road vehicles are very popular and built with precision engineering to ensure a long life With the help of the Clymer Polaris RZR 800 2008 2014 Repair Manual in your toolbox you will be able to maintain service and repair your RZR 800 to extend the life of your machine for years to come Clymer manuals are very well known for their thorough and comprehensive nature This manual is loaded with step by step procedures along with detailed photography exploded views charts and diagrams to enhance the steps associated with a service or repair task This Clymer manual is organized by subsystem with procedures grouped together for specific topics such as front suspension brake system engine and transmission It includes color wiring diagrams The language used in this Clymer repair manual is targeted toward the novice mechanic but is also very valuable for the experienced mechanic The service manual by Clymer is an authoritative piece of DIY literature and should provide you the confidence you need to get the job done and save money too **2003-2004 Predator Service Manual** Polaris Industries,2003 **Yamaha YFM350 and YFM400 ATV Owners Workshop Manual** Alan Harold Ahlstrand,John Harold Haynes,2004-11 Haynes offers the best coverage for cars trucks vans SUVs and motorcycles on the market today Each

manual contains easy to follow step by step instructions linked to hundreds of photographs and illustrations Included in every manual troubleshooting section to help identify specific problems tips that give valuable short cuts to make the job easier and eliminate the need for special tools notes cautions and warnings for the home mechanic color spark plug diagnosis and an easy to use index Clymer Polaris Ranger 800, 2010-2014 Haynes Publishing,2017-10-25 The Clymer Polaris Ranger 800 2010 2014 Repair Manual features complete maintenance and repair information for the Polaris RZR 800 built during model years 2008 2014 More than 700 Photos guide the reader through every job Where possible tools developed by the writers during the disassembly and reassembly of the machine are described in the text to save the reader from spending hundreds of dollars on factory tools Each manual features quick reference data plus chapters on Troubleshooting Lubrication maintenance and tune up Engine top end Engine lower end Clutch and drivebelt system Transmission Engine management system Electrical system Cooling system Wheels hubs and tires Front suspension steering and front gearcase Rear suspension and rear gearcase Brakes Body Wiring diagrams **Polaris ATVs 1998 Thru 2006** Alan Ahlstrand,John H. Haynes,2007-02 Haynes manuals are written specifically for the do it yourselfer yet are complete enough to be used by professional mechanics Since 1960 Haynes has produced manuals written from hands on experience based on a vehicle teardown with hundreds of photos and illustrations making Haynes the world leader in automotive repair information

Yamaha XZ 550 Vision V-Twins Owners Workbook Manual, No. M821 John Haynes,1988-03-31 Haynes offers the best coverage for cars trucks vans SUVs and motorcycles on the market today Each manual contains easy to follow step by step instructions linked to hundreds of photographs and illustrations Included in every manual troubleshooting section to help identify specific problems tips that give valuable short cuts to make the job easier and eliminate the need for special tools notes cautions and warnings for the home mechanic color spark plug diagnosis and an easy to use index **Motorcycles & ATV repair manual** Chilton,1986 *Chilton's Motorcycle and ATV Repair Manual, 1945-85* Chilton Book Company,1986 Gives advice on troubleshooting and repair techniques for motorcycles and all terrain vehicles built by Harley Davidson Honda Kawasaki Moto Guzzi Norton Suzuki Triumph and Yamaha Yamaha YFS200 Blaster ATV Alan Ahlstrand,John Harold Haynes,1999-08-27 Haynes offers the best coverage for cars trucks vans SUVs and motorcycles on the market today Each manual contains easy to follow step by step instructions linked to hundreds of photographs and illustrations Included in every manual troubleshooting section to help identify specific problems tips that give valuable short cuts to make the job easier and eliminate the need for special tools notes cautions and warnings for the home mechanic color spark plug diagnosis and an easy to use index Chilton's Motorcycle and ATV Repair Manual Chilton Automotive Editorial Staff,1986-04-01

Chilton's Motorcycle and ATV Repair Manual Chilton Book Company,1974 Suzuki 380 and 550 Owners Workshop Manual George Collett,1975 **Motorcycle Service Manual** ,1966 BSA Bantam Owners Workshop Manual Jeff Clew,1973

This book delves into 2015 Polaris 550 Atv Service Manual. 2015 Polaris 550 Atv Service Manual is a vital topic that needs to be grasped by everyone, ranging from students and scholars to the general public. The book will furnish comprehensive and in-depth insights into 2015 Polaris 550 Atv Service Manual, encompassing both the fundamentals and more intricate discussions.

1. This book is structured into several chapters, namely:
    - Chapter 1: Introduction to 2015 Polaris 550 Atv Service Manual
    - Chapter 2: Essential Elements of 2015 Polaris 550 Atv Service Manual
    - Chapter 3: 2015 Polaris 550 Atv Service Manual in Everyday Life
    - Chapter 4: 2015 Polaris 550 Atv Service Manual in Specific Contexts
    - Chapter 5: Conclusion
2. In chapter 1, the author will provide an overview of 2015 Polaris 550 Atv Service Manual. The first chapter will explore what 2015 Polaris 550 Atv Service Manual is, why 2015 Polaris 550 Atv Service Manual is vital, and how to effectively learn about 2015 Polaris 550 Atv Service Manual.
3. In chapter 2, the author will delve into the foundational concepts of 2015 Polaris 550 Atv Service Manual. The second chapter will elucidate the essential principles that must be understood to grasp 2015 Polaris 550 Atv Service Manual in its entirety.
4. In chapter 3, this book will examine the practical applications of 2015 Polaris 550 Atv Service Manual in daily life. This chapter will showcase real-world examples of how 2015 Polaris 550 Atv Service Manual can be effectively utilized in everyday scenarios.
5. In chapter 4, this book will scrutinize the relevance of 2015 Polaris 550 Atv Service Manual in specific contexts. This chapter will explore how 2015 Polaris 550 Atv Service Manual is applied in specialized fields, such as education, business, and technology.
6. In chapter 5, the author will draw a conclusion about 2015 Polaris 550 Atv Service Manual. The final chapter will summarize the key points that have been discussed throughout the book.
   This book is crafted in an easy-to-understand language and is complemented by engaging illustrations. It is highly recommended for anyone seeking to gain a comprehensive understanding of 2015 Polaris 550 Atv Service Manual.

https://recruitmentslovakia.sk/book/book-search/Download_PDFS/chapter%207%20section%203%20world%20history%20checkpoint%20answers.pdf

Table of Contents 2015 Polaris 550 Atv Service Manual

1. Understanding the eBook 2015 Polaris 550 Atv Service Manual
    - The Rise of Digital Reading 2015 Polaris 550 Atv Service Manual
    - Advantages of eBooks Over Traditional Books
2. Identifying 2015 Polaris 550 Atv Service Manual
    - Exploring Different Genres
    - Considering Fiction vs. Non-Fiction
    - Determining Your Reading Goals
3. Choosing the Right eBook Platform
    - Popular eBook Platforms
    - Features to Look for in an 2015 Polaris 550 Atv Service Manual
    - User-Friendly Interface
4. Exploring eBook Recommendations from 2015 Polaris 550 Atv Service Manual
    - Personalized Recommendations
    - 2015 Polaris 550 Atv Service Manual User Reviews and Ratings
    - 2015 Polaris 550 Atv Service Manual and Bestseller Lists
5. Accessing 2015 Polaris 550 Atv Service Manual Free and Paid eBooks
    - 2015 Polaris 550 Atv Service Manual Public Domain eBooks
    - 2015 Polaris 550 Atv Service Manual eBook Subscription Services
    - 2015 Polaris 550 Atv Service Manual Budget-Friendly Options
6. Navigating 2015 Polaris 550 Atv Service Manual eBook Formats
    - ePub, PDF, MOBI, and More
    - 2015 Polaris 550 Atv Service Manual Compatibility with Devices
    - 2015 Polaris 550 Atv Service Manual Enhanced eBook Features
7. Enhancing Your Reading Experience
    - Adjustable Fonts and Text Sizes of 2015 Polaris 550 Atv Service Manual
    - Highlighting and Note-Taking 2015 Polaris 550 Atv Service Manual
    - Interactive Elements 2015 Polaris 550 Atv Service Manual

8. Staying Engaged with 2015 Polaris 550 Atv Service Manual
    - Joining Online Reading Communities
    - Participating in Virtual Book Clubs
    - Following Authors and Publishers 2015 Polaris 550 Atv Service Manual
9. Balancing eBooks and Physical Books 2015 Polaris 550 Atv Service Manual
    - Benefits of a Digital Library
    - Creating a Diverse Reading Collection 2015 Polaris 550 Atv Service Manual
10. Overcoming Reading Challenges
    - Dealing with Digital Eye Strain
    - Minimizing Distractions
    - Managing Screen Time
11. Cultivating a Reading Routine 2015 Polaris 550 Atv Service Manual
    - Setting Reading Goals 2015 Polaris 550 Atv Service Manual
    - Carving Out Dedicated Reading Time
12. Sourcing Reliable Information of 2015 Polaris 550 Atv Service Manual
    - Fact-Checking eBook Content of 2015 Polaris 550 Atv Service Manual
    - Distinguishing Credible Sources
13. Promoting Lifelong Learning
    - Utilizing eBooks for Skill Development
    - Exploring Educational eBooks
14. Embracing eBook Trends
    - Integration of Multimedia Elements
    - Interactive and Gamified eBooks

2015 Polaris 550 Atv Service Manual Introduction

In the digital age, access to information has become easier than ever before. The ability to download 2015 Polaris 550 Atv Service Manual has revolutionized the way we consume written content. Whether you are a student looking for course material, an avid reader searching for your next favorite book, or a professional seeking research papers, the option to download 2015 Polaris 550 Atv Service Manual has opened up a world of possibilities. Downloading 2015 Polaris 550 Atv Service Manual provides numerous advantages over physical copies of books and documents. Firstly, it is incredibly

convenient. Gone are the days of carrying around heavy textbooks or bulky folders filled with papers. With the click of a button, you can gain immediate access to valuable resources on any device. This convenience allows for efficient studying, researching, and reading on the go. Moreover, the cost-effective nature of downloading 2015 Polaris 550 Atv Service Manual has democratized knowledge. Traditional books and academic journals can be expensive, making it difficult for individuals with limited financial resources to access information. By offering free PDF downloads, publishers and authors are enabling a wider audience to benefit from their work. This inclusivity promotes equal opportunities for learning and personal growth. There are numerous websites and platforms where individuals can download 2015 Polaris 550 Atv Service Manual. These websites range from academic databases offering research papers and journals to online libraries with an expansive collection of books from various genres. Many authors and publishers also upload their work to specific websites, granting readers access to their content without any charge. These platforms not only provide access to existing literature but also serve as an excellent platform for undiscovered authors to share their work with the world. However, it is essential to be cautious while downloading 2015 Polaris 550 Atv Service Manual. Some websites may offer pirated or illegally obtained copies of copyrighted material. Engaging in such activities not only violates copyright laws but also undermines the efforts of authors, publishers, and researchers. To ensure ethical downloading, it is advisable to utilize reputable websites that prioritize the legal distribution of content. When downloading 2015 Polaris 550 Atv Service Manual, users should also consider the potential security risks associated with online platforms. Malicious actors may exploit vulnerabilities in unprotected websites to distribute malware or steal personal information. To protect themselves, individuals should ensure their devices have reliable antivirus software installed and validate the legitimacy of the websites they are downloading from. In conclusion, the ability to download 2015 Polaris 550 Atv Service Manual has transformed the way we access information. With the convenience, cost-effectiveness, and accessibility it offers, free PDF downloads have become a popular choice for students, researchers, and book lovers worldwide. However, it is crucial to engage in ethical downloading practices and prioritize personal security when utilizing online platforms. By doing so, individuals can make the most of the vast array of free PDF resources available and embark on a journey of continuous learning and intellectual growth.

FAQs About 2015 Polaris 550 Atv Service Manual Books

1. Where can I buy 2015 Polaris 550 Atv Service Manual books? Bookstores: Physical bookstores like Barnes & Noble, Waterstones, and independent local stores. Online Retailers: Amazon, Book Depository, and various online bookstores offer a wide range of books in physical and digital formats.

2. What are the different book formats available? Hardcover: Sturdy and durable, usually more expensive. Paperback: Cheaper, lighter, and more portable than hardcovers. E-books: Digital books available for e-readers like Kindle or software like Apple Books, Kindle, and Google Play Books.
3. How do I choose a 2015 Polaris 550 Atv Service Manual book to read? Genres: Consider the genre you enjoy (fiction, non-fiction, mystery, sci-fi, etc.). Recommendations: Ask friends, join book clubs, or explore online reviews and recommendations. Author: If you like a particular author, you might enjoy more of their work.
4. How do I take care of 2015 Polaris 550 Atv Service Manual books? Storage: Keep them away from direct sunlight and in a dry environment. Handling: Avoid folding pages, use bookmarks, and handle them with clean hands. Cleaning: Gently dust the covers and pages occasionally.
5. Can I borrow books without buying them? Public Libraries: Local libraries offer a wide range of books for borrowing. Book Swaps: Community book exchanges or online platforms where people exchange books.
6. How can I track my reading progress or manage my book collection? Book Tracking Apps: Goodreads, LibraryThing, and Book Catalogue are popular apps for tracking your reading progress and managing book collections. Spreadsheets: You can create your own spreadsheet to track books read, ratings, and other details.
7. What are 2015 Polaris 550 Atv Service Manual audiobooks, and where can I find them? Audiobooks: Audio recordings of books, perfect for listening while commuting or multitasking. Platforms: Audible, LibriVox, and Google Play Books offer a wide selection of audiobooks.
8. How do I support authors or the book industry? Buy Books: Purchase books from authors or independent bookstores. Reviews: Leave reviews on platforms like Goodreads or Amazon. Promotion: Share your favorite books on social media or recommend them to friends.
9. Are there book clubs or reading communities I can join? Local Clubs: Check for local book clubs in libraries or community centers. Online Communities: Platforms like Goodreads have virtual book clubs and discussion groups.
10. Can I read 2015 Polaris 550 Atv Service Manual books for free? Public Domain Books: Many classic books are available for free as theyre in the public domain. Free E-books: Some websites offer free e-books legally, like Project Gutenberg or Open Library.

Find 2015 Polaris 550 Atv Service Manual :

chapter 7 section 3 world history checkpoint answers
chemistry 1150 final

chapter 4 exam review sheet chemistry core teaching resources
chapter 5recapitulaci n
chapter 5 biological diversity and conservation answer key
~~chemfiesta word equations answer key~~
chemical changes section 1 reinforcement chemical reactions
chapter 7 the skeleton workbook answers
chapter 8 2 biology notes
chemistry diagnostic test answers pearson education
~~chapter 30 lewis bank test~~
~~chapter test understanding populations short answer~~
chemistry concep review simle ions
~~check admission status in university of limpopo~~
chemistry grade 10 2013 caps memo

2015 Polaris 550 Atv Service Manual :

le più belle storie in giallo amazon es libros - Feb 26 2022
web le più belle storie in giallo amazon es libros saltar al contenido principal es hola elige tu dirección todos los departamentos selecciona el departamento que quieras buscar
le più belle storie in giallo 9788852224898 books amazon ca - Aug 03 2022
web le più belle storie in giallo 9788852224898 books amazon ca skip to main content ca hello select your address books en hello sign in account lists returns orders
le più belle storie in giallo disney ebook libreria ibs - Mar 10 2023
web disney editore disney libri formato epub3 con adobe drm testo in italiano cloud sì scopri di più compatibilità tutti i dispositivi eccetto kindle scopri di più ean
le più belle storie in giallo 9788852239090 in fumetti libreria - Apr 30 2022
web acquista le più belle storie in giallo su libreria universitaria spedizione gratuita sopra i 25 euro su libreria universitaria giocattoli prima infanzia articoli cucina le più belle
le più belle storie in giallo amazon com au books - Nov 25 2021
web le più belle storie in giallo amazon com au books skip to main content com au delivering to sydney 1171 sign in to update books select the department you want to

le più belle storie in giallo giunti giunti editore - Dec 27 2021
web sep 30 2015 le migliori storie a fumetti in giallo con protagonisti i personaggi del mondo disney cartaceo acquista su prezzo 9 90 editore disney libri
le più belle storie the best of in giallo giunti - Aug 15 2023
web may 25 2022 le avventure proposte in questo volume sono un concentrato di paura e mistero ritroviamo le classiche atmosfere del thriller in una selezione di storie che tra enigmi e investigatori esaltano il genere letterario del giallo
le più belle storie in giallo hardcover 30 sept 2015 - Jan 08 2023
web disney le più belle storie in giallo hardcover 30 sept 2015 italian edition 471 ratings part of le più belle storie 51 books see all formats and editions hardcover
le più belle storie in giallo libro mondadori store - Dec 07 2022
web le più belle storie in giallo pubblicato da walt disney company italia dai un voto prezzo online 9 90 o 3 rate da 3 30 senza interessi disponibilità immediata la
le più belle storie in giallo disney ebook mondadori store - Sep 23 2021
web le avventure proposte in questo volume sono un concentrato di paura e mistero ritroviamo le classiche atmosfere del thriller in una selezione di storie che tra enigmi e investigatori
le più belle storie in giallo 8 le più belle storie disney - Mar 30 2022
web jan 8 2018 pagine 368 p ill le più belle storie in giallo descrizione le migliori storie a fumetti dedicate ai gialli con protagonisti i personaggi del mondo disney indagini
le più belle storie in giallo italian edition kindle edition - Sep 04 2022
web jun 3 2015 buy le più belle storie in giallo italian edition read kindle store reviews amazon com
amazon fr le più belle storie in giallo livres - Jul 02 2022
web noté 5 retrouvez le più belle storie in giallo et des millions de livres en stock sur amazon fr achetez neuf ou d occasion
le più belle storie in giallo libro lafeltrinelli - Feb 09 2023
web le storie in giallo e i personaggi disney sono intrecciate da sempre e in particolare topolino è il grande protagonista di indagini inseguimenti all ultimo respiro e lotta con i
le più belle storie in giallo formato kindle amazon it - Jun 01 2022
web collezione molto bella che contiene 9 storie dedicate al mondo del giallo a fumetti la maggior parte delle storie ha topolino come protagonista ma troviamo anche altri
le più belle storie in giallo disney walt amazon it libri - Jun 13 2023
web collezione molto bella che contiene 9 storie dedicate al mondo del giallo a fumetti la maggior parte delle storie ha

topolino come protagonista ma troviamo anche altri
le più belle storie in giallo aa vv amazon it libri - Oct 05 2022
web le avventure proposte in questo volume sono un concentrato di paura e mistero ritroviamo le classiche atmosfere del thriller in una selezione di storie che tra enigmi e investigatori
le più belle storie in giallo libro disney libri le più belle - Jul 14 2023
web le più belle storie in giallo è un libro pubblicato da disney libri nella collana le più belle storie the best of acquista su ibs a 9 40
le più belle storie in giallo amazon com au books - Oct 25 2021
web select the department you want to search in
le più belle storie in giallo by walt disney company - Nov 06 2022
web apr 1 2014 85 ratings12 reviews le migliori storie a fumetti in giallo con protagonisti i personaggi del mondo disney genres comics graphic novels comics manga short
le più belle storie in giallo the best of vol 8 amazon it - Apr 11 2023
web le più belle storie in giallo the best of vol 8 è un antologia di racconti di genere giallo scritti da autori famosi come agatha christie arthur conan doyle e georges
le più belle storie in giallo libro disney libri libreria ibs - May 12 2023
web dec 5 2020 le più belle storie in giallo è un libro pubblicato da disney libri nella collana le più belle storie acquista su ibs a 9 34
le più belle storie horror disney walt amazon it libri - Jan 28 2022
web disney le più belle storie horror copertina rigida 17 giugno 2015 di walt disney autore 483 voti parte di le più belle storie 76 libri visualizza tutti i formati ed edizioni
ministry of education india wikipedia - Oct 26 2022
web the ministry is further divided into two departments the department of school education and literacy which deals with primary secondary and higher secondary education adult education and literacy and the department of higher education which deals with university level education technical education scholarships etc
department for education gov uk - Dec 28 2022
web the department for education is responsible for children s services and education including early years schools higher and further education policy apprenticeships and wider skills in england
ministry of education ontario ca - May 21 2022
web fund and oversee publicly funded elementary and secondary school education develop and publish curriculum

2015 Polaris 550 Atv Service Manual

documents and teaching resources for kindergarten to grade 12 set provincial standards and guidelines for all assessment evaluation and reporting for all students who attend public or private schools in ontario

ministry of education - Mar 31 2023

web oct 17 2023 graduate school enrollment quota policy shifts from preemptive regulations to enabling post hoc evaluation of education and research performance 2023 10 20 the ministry of education travels nationwide to explain 2028 college admissions reform proposal 2023 10 20 all ministries join forces to help students

ministry of education وزارة التعليم - Feb 15 2022

web الموقع الرسمي لوزارة التعليم تعليم متميز لبناء مجتمع معرفي منافس عالميا

contact us وزارة التربية والتعليم - Jun 21 2022

web nov 1 2023 the ministry of education adopts the open door policy to promote transparency credibility and collaboration with all parties with a view to develop and sustain the mechanisms of work and the provided services through receiving remarks suggestions and queries from all segments of society

home moe gov ae - Jul 03 2023

web site is best viewed in a 180x1024 screen resolution browser compatibility microsoft internet explorer 11 0 firefox 35 0 safari 5 1 chrome 39 0

service catalog وزارة التربية والتعليم - Sep 24 2022

web site is best viewed in a 180x1024 screen resolution browser compatibility microsoft internet explorer 11 0 firefox 35 0 safari 5 1 chrome 39 0

ministry of education guyana - Jul 23 2022

web school education system covid19 in effect find a school school placement secure safety of school health nutrition order discipline in schools role of schools welfare officers parenting tips moe contacts

the ministry of national education published the - Jan 29 2023

web the ministry of national education published the book of twenty years of education in turkey the ministry of national education published a book that analyses the steps taken in the 2000s when transformation in education began by using quantitative indicators

home education in new zealand ministry of education - Mar 19 2022

web helping you find what you need to know about education in new zealand an education web portal provided by the new zealand ministry of education

ministry of national education turkey wikipedia - Feb 27 2023

web the ministry of national education turkish milli eğitim bakanlığı is a government ministry of the republic of turkey

responsible for the supervision of public and private educational system agreements and authorizations under a national curriculum

login □□□□□□□□ □□□□□□□ □□□□□ - Apr 19 2022

web a single trusted digital identity for all citizens residents and visitors don t have an account create a new account uae ministry of education identity application

major initiatives government of india ministry of education - Nov 26 2022

web sep 27 2023 in pursuance of this mission the ministry of education moe was created on september 26 1985 through the 174th amendment to the government of india allocation of business rules 1961 currently the moe works through two departments 1 department of school education literacy 2 department of higher education

cyprus ministry of education sport and youth moec - Aug 24 2022

web welcome to the website of the cyprus ministry of education sport and youth the website contains information regarding the cyprus educational system the departments services and committees of the ministry

t c millî eğitim bakanlığı - Oct 06 2023

web oct 4 2023 bakan tekİn erzurum da ÖĞrencİlerle bİrlİkte gazze dekİ saldirilarda Ölen Çocuklar İÇİn saygi duruŞunda bulundu

ministry of education moe access service systems solutions - Jun 02 2023

web higher education loan programme framework scholarships and advanced training division education early childhood care and education ecce division primary school secondary school tertiary part time programme of continuing education classes 2023 2024 technical and vocational education and training the nursing

ministry of education ethiopia - May 01 2023

web mar 28 2023 education sector transformation the ministry has begun projects to improve and introduce technology as a means to alleviate chronic problems faced in the educational sector d test

news t c millî eğitim bakanlığı - Aug 04 2023

web minister Özer had a meeting with montenegro s minister of education vojİnovİc minister of national education mahmut Özer got together with montenegro s minister of education miomir vojinovic in order to boost cooperation between two ministries in education 20 12 2022 minister Özer key to integration is

t c millî eğitim bakanlığı - Sep 05 2023

web after the opening of the turkish grand national assembly on april 23 1920 the minister of education was also took part in the council of ministers which consisted of 11 members established by the law no 3 and 2 may 1920 in 1923 the ministry of education was abolished in istanbul undersecretariat department of higher education

doc modul pelatihan php yusufww 001 academia edu - Jun 04 2022
modul pelatihan php yusufww 001 see full pdf download pdf see full pdf download pdf related papers
modul pelatihan php mysql book - Aug 18 2023
as the first true academic textbook in the market to combine php with mysql php programming with mysql by don gosselin covers one of the fastest growing technology combinations for developing interactive web sites php programming with mysql jul 02 2021 this book covers the basics of php and mysql along with introductions to
modul pelatihan php mysql help environment harvard edu - Mar 01 2022
this online declaration modul pelatihan php mysql can be one of the options to accompany you in the same way as having further time it will not waste your time take me the e book will categorically announce you additional thing to read just invest little time to way in this on line notice modul pelatihan php mysql as competently as
modul pelatihan php and mysql pdf scribd - Dec 10 2022
modul pelatihan php and mysql pendahuluan konsep multi tier application multi tier application adalah aplikasi yang dibagi menjadi beberapa bagian yang menjalankan fungsi masing masing secara umum ada tiga bagian utama dari multi tier application client side presentation server side business logic backend storage
modul pelatihan php and mysql pdf scribd - Jun 16 2023
doc pdf txt atau baca online dari scribd bagikan dokumen ini bagikan atau tanam dokumen
en İyi online mysql kursları güncellendi ekim 2023 - Jan 11 2023
bir veritabanı oluşturma ve tasarlamadan web uygulamalarını oluşturmak için mysql ve php kullanmaya kadar seviye ve ihtiyaçlarınıza göre en iyi mysql kurslarını keşfedin mysql ve php programcılar ve veri mühendisleri tarafından web uygulamaları ile çalışmak ve veritabanları oluşturmak için yaygın olarak kullanılmaktadır
pdf modul pelatihan php dan my sql dokumen tips - Sep 19 2023
aug 3 2019 8 3 2019 modul pelatihan php dan my sql 9 43 modu l pe la t ihan php latihan 1 tampilkan kalimat seperti pada gambar title judul font face verdana size 4 color blue 2 membuat hyperlinkbuatlah 2 buah halaman html beri link masing masing halaman untuk berpindah ke halamanlain halaman1 html halaman2 html 8 3 2019 modul
modul pelatihan php and mysql pdf scribd - Oct 08 2022
modul pelatihan php and mysql pendahuluan konsep multi tier application multi tier application adalah aplikasi yang dibagi menjadi beberapa bagian yang menjalankan fungsi masing masing secara umum ada tiga bagian utama dari multi tier application client side presentation server side business logic backend storage client side presentation
php mysql eğitimi Ücretsiz php mysql dersleri mobilhanem - Apr 14 2023
php mysql eğitimi Ücretsiz php mysql dersleri mobilhanem php eğitimi web programlamanın en fazla tercih edilen dillerinden

biri olan php yi detaylı bir şekilde hem de ücretsiz öğrenmek ister misiniz sizinde bir internet siteniz olsun mu istiyorsunuz sunucu tabanlı bir yazılım mı yapmak istiyorsunuz

database mysql pusat pendidikan pelatihan sdm - Apr 02 2022

mysql termasuk salah satu database utama yang digunakan di indonesia terutama di kalangan developer php ini disebabkan native integration antara php dan mysql serta banyaknya hosting yang menyertakan kedua produk tersebut karena bebas lisensi dan sudah terbukti tangguh dan efisien materi training database mysql pengenalan database

doc modul pelatihan php naveed megan academia edu - Aug 06 2022

prosedur penginstallan web server php dan mysql dapat anda baca pada manual masing masing adapun manual dan instalan apache php maupun mysql dapat anda cari di ftpsearch itb ac id

sıfırdan İleriye php ve mysql eğitim seti pdo mysqlİ - May 15 2023

birbirlerini tekrarlayan php eğitim setlerinin klasik düzenlerinden bir nebzede olsa uzaklaşarak örnekler üzerinden asıl mantığın ne olduğunu anlatmaya çalıştım her ne kadar php akan bir nehir olsada gerekli bilgilerin kavranmasıyla birlikte tüm yeniliklere ve değişikliklere sette yer alan bilgiler doğrultusunda kolayca adapte olunacağının kanısındayım

database mysql pemula sampai mahir udemy - Mar 13 2023

mysql database studi kasus database mysql database design persyaratan mampu mengoperasikan komputer deskripsi tutorial dan belajar database mysql salah satu database opensource paling populer di dunia selamat datang di course database mysql dari pemula sampai mahir

modul pelatihan php mysql wp lacalera gob ar - Jul 05 2022

modul pelatihan php mysql java mysql membangun dari nol sistem manajemen database sekolah vivian siahaan 2019 05 22 pada buku ini anda akan mempelajari bagaimana membangun dari nol sebuah sistem manajemen database mysql menggunakan java dalam merancang gui dan sebagai ide anda akan memanfaatkan perangkat

pdf modul pelatihan php dan my sql pdfslide tips - Jan 31 2022

aug 3 2019 8 3 2019 modul pelatihan php dan my sql 1 43modu l pe la t ihan phpkurikulum pelatihansesi ipendahuluanpenjelasan secara umum html php mysql apachepemrograman client servermenggunakan

pelatihan php mysql standard grc training consulting - Sep 07 2022

may 30 2023 training php mysql standard php mysql standard php hypertext preprocessor adalah bahasa pemrograman web yang sangat populer saat ini bersifat open source mudah dipelajari berjalan di multi platform dan memiliki dukungan terhadap sistem basis data dbms yang beragam oracle mysql ms sql server dan lainnya

how do i install mysql modules within php stack overflow - May 03 2022

oct 2 2008 to directory in which the loadable extensions modules reside extension dir c windows system32 result no change

i changed the php ini value of extension dir thusly extension dir c windows system32 result much more in the phpinfo report but mysql still isn t working

modul pelatihan php dan my sql pdf scribd - Jul 17 2023

modul pelatihan php fungsi php untuk mysql untuk berkoneksi dengan mysql php mempunya fungsi mysql connect host user password untuk memilih database mysql select db nama database untuk melakukan query perintah sql mysql query string query untuk mengambil data dari tabel mysql fetch row result

doc modul pelatihan php mansur muchtar academia edu - Nov 09 2022

modul pelatihan php mansur muchtar see full pdf download pdf related papers ebook pemrograman web dengan php dan mysql fikriansyah hq buku ini disusun berdasarkan materi perkuliahan pemrograman web sesuai dengan kurikulum standar di perguruan tinggi komputer

php mysql certification course for beginners udemy - Feb 12 2023

php server side form validation creating mysql databases database administration with phpmyadmin administering database users and defining user roles sql statements select where and or insert get last id mysql prepared statements and multiple record insertion php isset mysql updating records